IS09001 CE
VPC PNEUMATIC®

AQ Series Quick Exhaust Valve

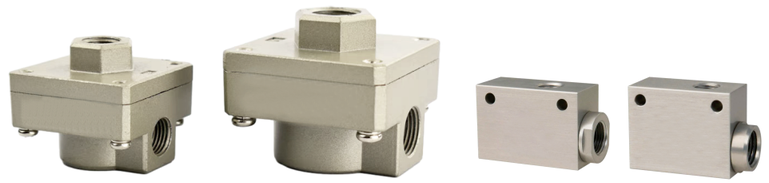

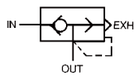

Ordering Code AQ Series Quick Exhaust Valve

AQ 2 0 0 0 - □ 02 - □

Standard size
1: 1/8
2: 1/4
3: 3/8
5: 3/4

Type

Symbol	Type	Applicable model
0	Diaphragm	AQ2 to AQ5
5	Lip	AQ1 Only

Standard
0: M5×0.8
1: 1/8
* "AQ15□0" only

Thread type

Nil	Metric thread (M5)
	Rc
N	NPT
F	G

Port size

Port size		Applicable series
M5	M5×0.8	AQ1500
01	1/8	AQ1510/2000
02	1/4	AQ2000/3000
03	3/8	AQ3000
04	1/2	AQ5000
06	3/4	

Option

Nil	Standard (−5 to 60°C)
H	High temperature (−5 to 80°C)
L	Low temperature (−30 to 60°C)

* AQ1500 and AQ1510 are not available.

Specifications

Working medium		Air
Proof pressure		1.5MPa
Max. working pressure	AQ15□0	0.7MPa
	AQ2000 to 5000	1MPa
Min. working pressure	AQ15□0	0.1MPa
	AQ2000 to 5000	0.05MPa
Working temperature		−5 to 60°C (No freezing)

AQ Series Quick Exhaust Valve

Model

Model	Port size	Sonic conductance dm³/(s·bar)		Critical pressure ratio	
		IN→OUT	OUT→EXH	IN→OUT	OUT→EXH
AQ1500-M5	M5×0.8	0.4	0.56	0.35	0.3
AQ1510-01	1/8	0.8	1.16		
AQ2000-01	1/8	5	5	0.45	0.35
AQ2000-02	1/4	7	8		
AQ3000-02	1/4	8	8.4		
AQ3000-03	3/8	12	14		
AQ5000-04	1/2	21	23		
AQ5000-06	3/4	27	36		

Main Dimensions

AQ1500/1510

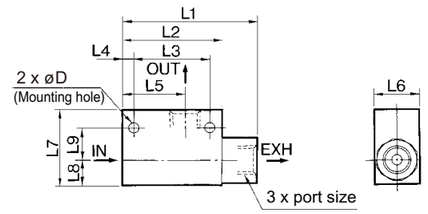

Model	Port size	L1	L2	L3	L4	L5	L6	L7	L8	L9	D
AQ1500	M5×0.8	23	20	14	3	12.5	12	15	5.5	6.5	3.1
AQ1510	1/8	45	33	25	4	21	15	25	8	11	4.3

AQ2000/3000/5000

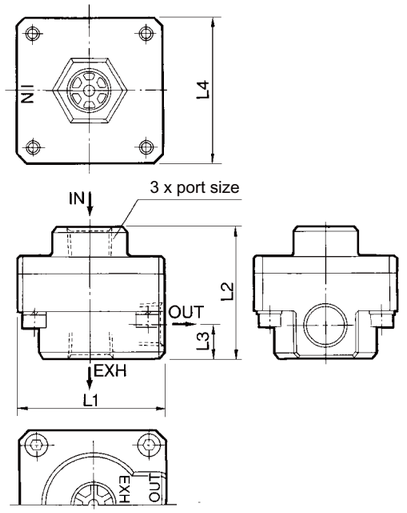

Model	Port size	L1	L2	L3	L4
AQ2000	1/8, 1/4	45	40	10	45
AQ3000	1/4, 3/8	56	50	12.5	56
AQ5000	1/2, 3/4	85	75	18	85