QTY Series Regulator

Ordering Code

QTY Series Regulator

QTY - 15

- QTY: Series code
- 15: Port size

08: G1/4 10: G3/8
15: G1/2 20: G3/4
25: G1 32: G1 1/4
40: G1 1/2 50: G2



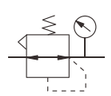

Specifications

Model	QTY-08	QTY-10	QTY-15	QTY-20	QTY-25	QTY-32	QTY-40	QTY-50
Port size	G1/4	G3/8	G1/2	G3/4	G1	G1 1/4	G1 1/2	G2
Working medium	Clean air(40μm filteration)							
Proof pressure	1.5MPa							
Set pressure range	0.05 to 0.8MPa							
Working temperature	5 to 60℃							
Body material	Aluminum							

Main Dimensions

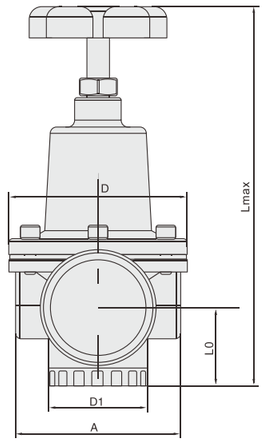

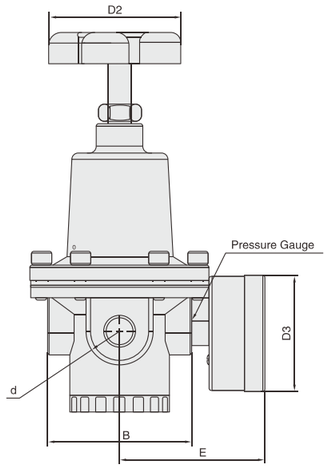

(mm)

Model	Port size	A	B	D	D1	D2	D3	d	L0	E	Lmax
QTY-08	G1/4	74	64	Φ80	Φ34	Φ60	Φ58	16	36	80	113
QTY-10	G3/8	74	64	Φ80	Φ34	Φ60	Φ58	16	36	80	113
QTY-15	G1/2	74	64	Φ80	Φ44	Φ60	Φ58	21	37	80	181
QTY-20	G3/4	109	113	Φ120	Φ60	Φ90	Φ58	30	48	100	250
QTY-25	G1	109	113	Φ120	Φ60	Φ90	Φ58	30	48	100	250
QTY-32	G1 1/4	136	104	Φ120	Φ60	Φ90	Φ58	40	60	100	280
QTY-40	G1 1/2	136	104	Φ120	Φ60	Φ90	Φ58	40	60	100	280
QTY-50	G2	136	104	Φ120	Φ62	Φ90	Φ58	45	60	100	280

QTYH Series Regulator

Ordering Code

QTYH Series Regulator

QTYH - 15

- QTYH: Series code
- 15: Port size

08: G1/4 10: G3/8
15: G1/2 20: G3/4
25: G1 32: G1 3/8
40: G1 1/2 50: G2



Specifications

Model	QTYH-08	QTYH-10	QTYH-15	QTYH-20	QTYH-25	QTYH-32	QTYH-40	QTYH-50
Port size	G1/4	G3/8	G1/2	G3/4	G1	G1 3/8	G1 1/2	G2
Working medium	Clean air(40μm filteration)							
Proof pressure	4MPa							
Set pressure range	0.1 to 3.5MPa							
Working temperature	-5 to 60℃							
Body material	Aluminum							

Main Dimensions

QTYH-15

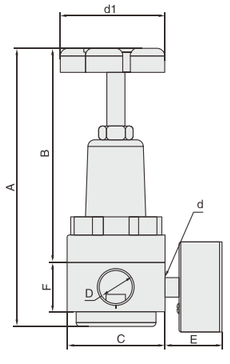

QTYH-20 to 25

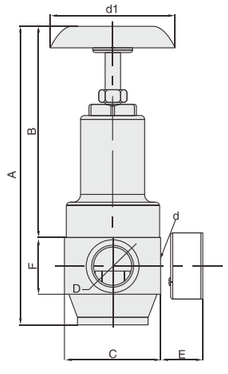

QTYH-32 to 50

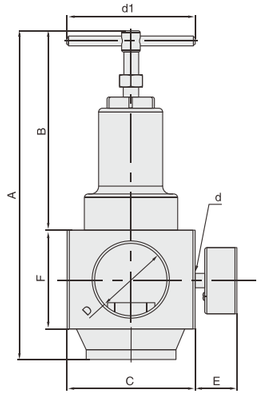

(mm)

Model	A	B	C	D	E	F	d	d1
QTYH-08	156.5	121	55×55	G1/2	32.5	28	G1/4	63
QTYH-10	156.5	121	55×55	G1/2	32.5	28	G1/4	63
QTYH-15	156.5	121	55×55	G1/2	32.5	28	G1/4	63
QTYH-20	232	164.5	75×75	G3/4	32.5	44	G1/4	98
QTYH-25	232	164.5	75×75	G1	32.5	44	G1/4	98
QTYH-32	256	155	100×100	G1 1/4	32.5	77	G1/4	100
QTYH-40	256	155	100×100	G1 1/2	32.5	77	G1/4	100
QTYH-50	256	155	100×100	G2	32.5	77	G1/4	100